MULTIPLEX COMMUNICATION SYSTEM (RHD)

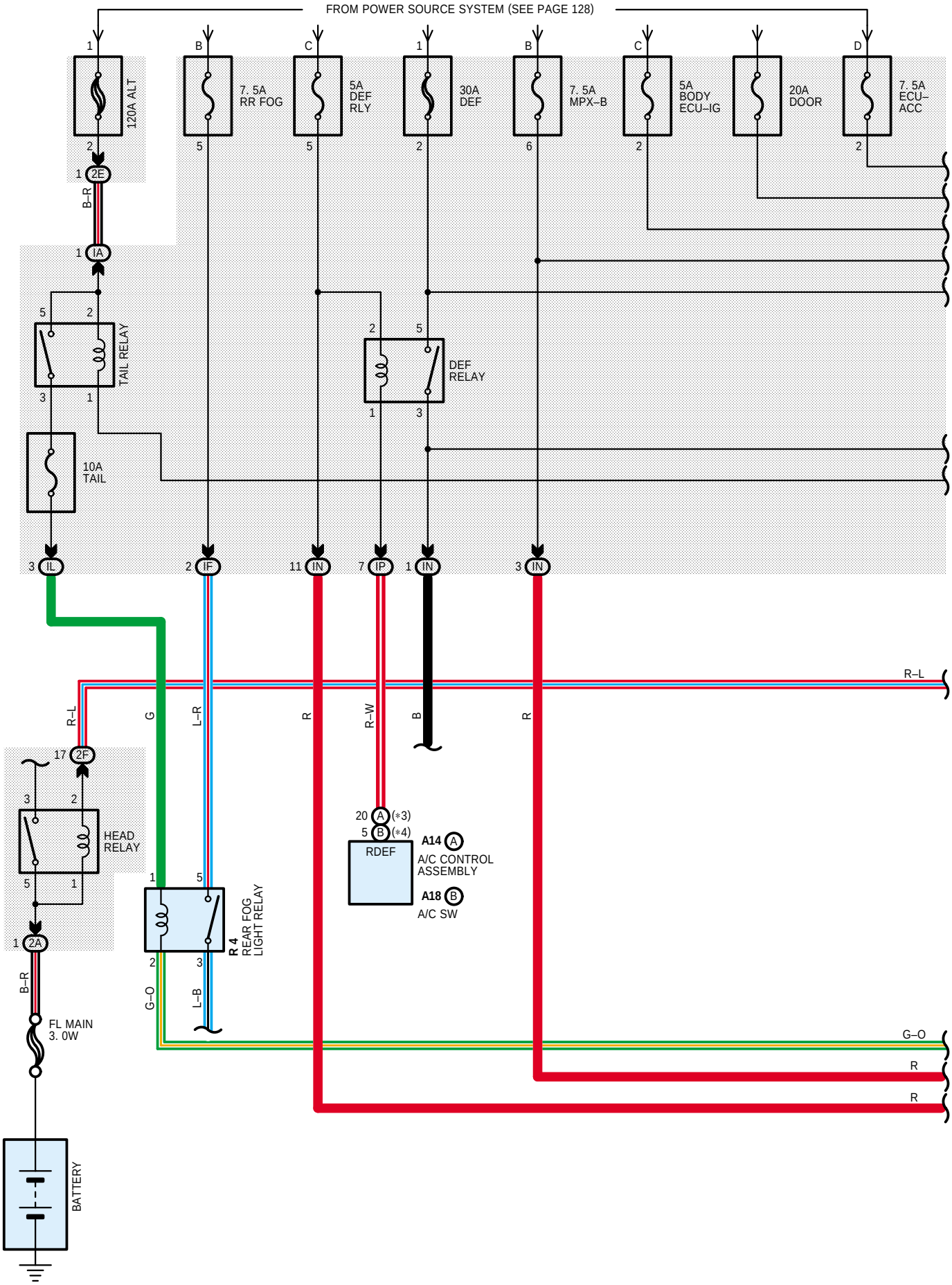

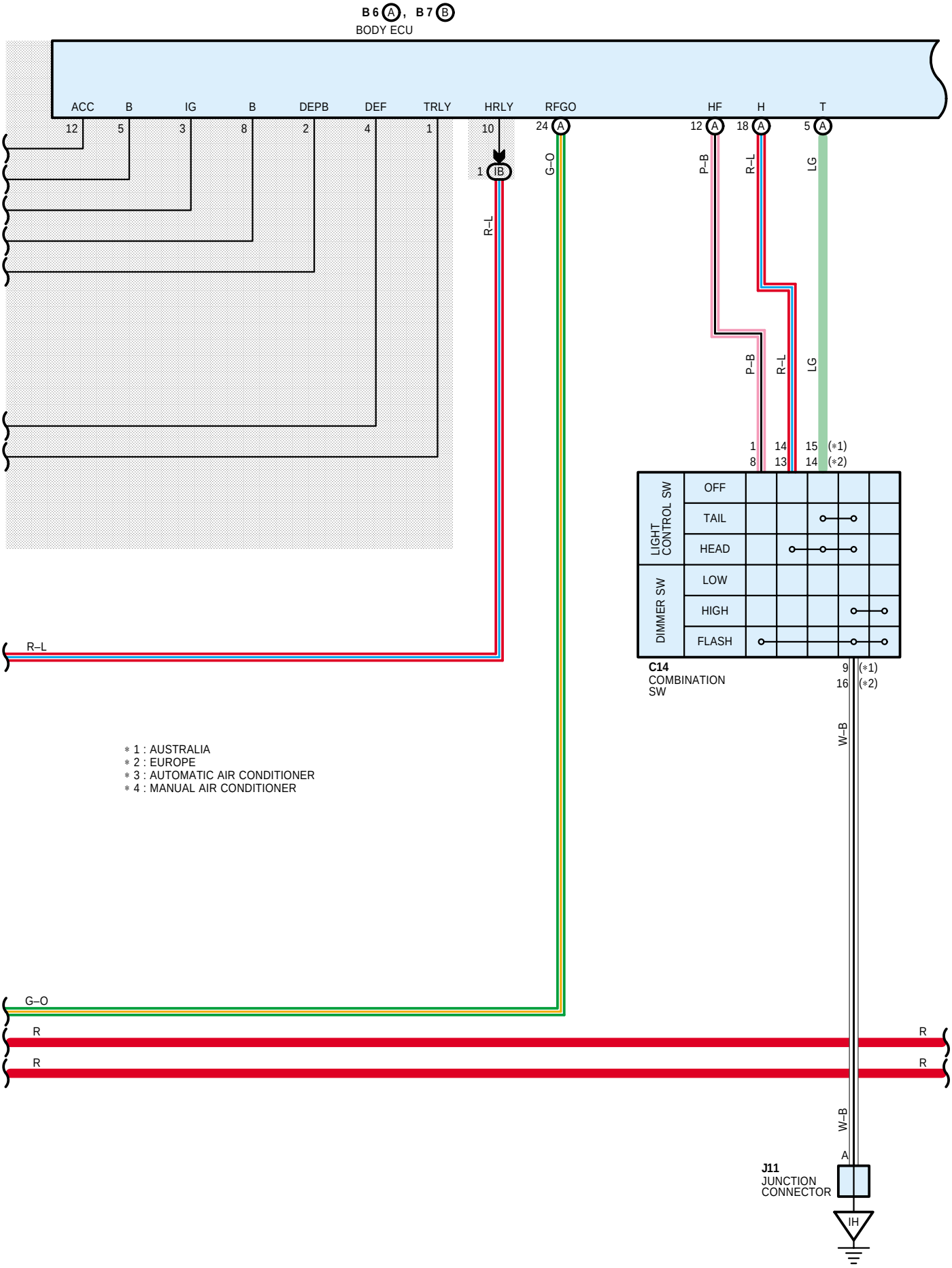
B6 A, B7 B
BODY ECU
ACC
B
IG
B
DEPB
DEF
TRLY
HRLY
RFGO
HF
H
T
12
5
3
8
2
4
1
10
1 IB
24 A
12 A
18 A
5 A
R–L
G–O
P–B
R–L
LG
P–B
R–L
LG
1
8
14
13
15 (*1)
14 (*2)
LIGHT CONTROL SW
OFF
TAIL
HEAD
DIMMER SW
LOW
HIGH
FLASH
C14
COMBINATION SW
9 (*1)
16 (*2)
W–B
R–L
G–O
R
R
R
R
W–B
A
J11
JUNCTION CONNECTOR
IH
* 1 : AUSTRALIA
* 2 : EUROPE
* 3 : AUTOMATIC AIR CONDITIONER
* 4 : MANUAL AIR CONDITIONER

MULTIPLEX COMMUNICATION SYSTEM (RHD)

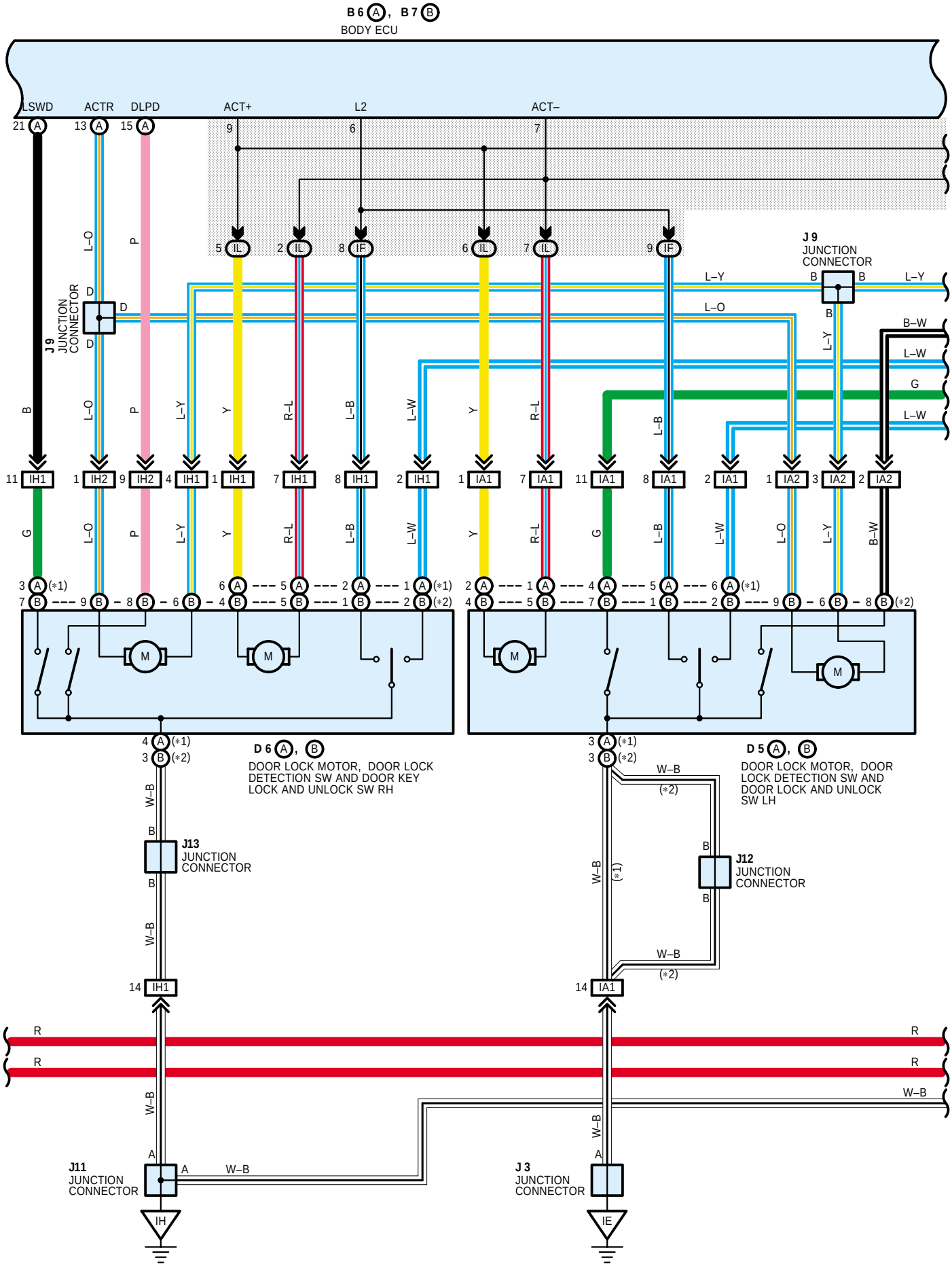

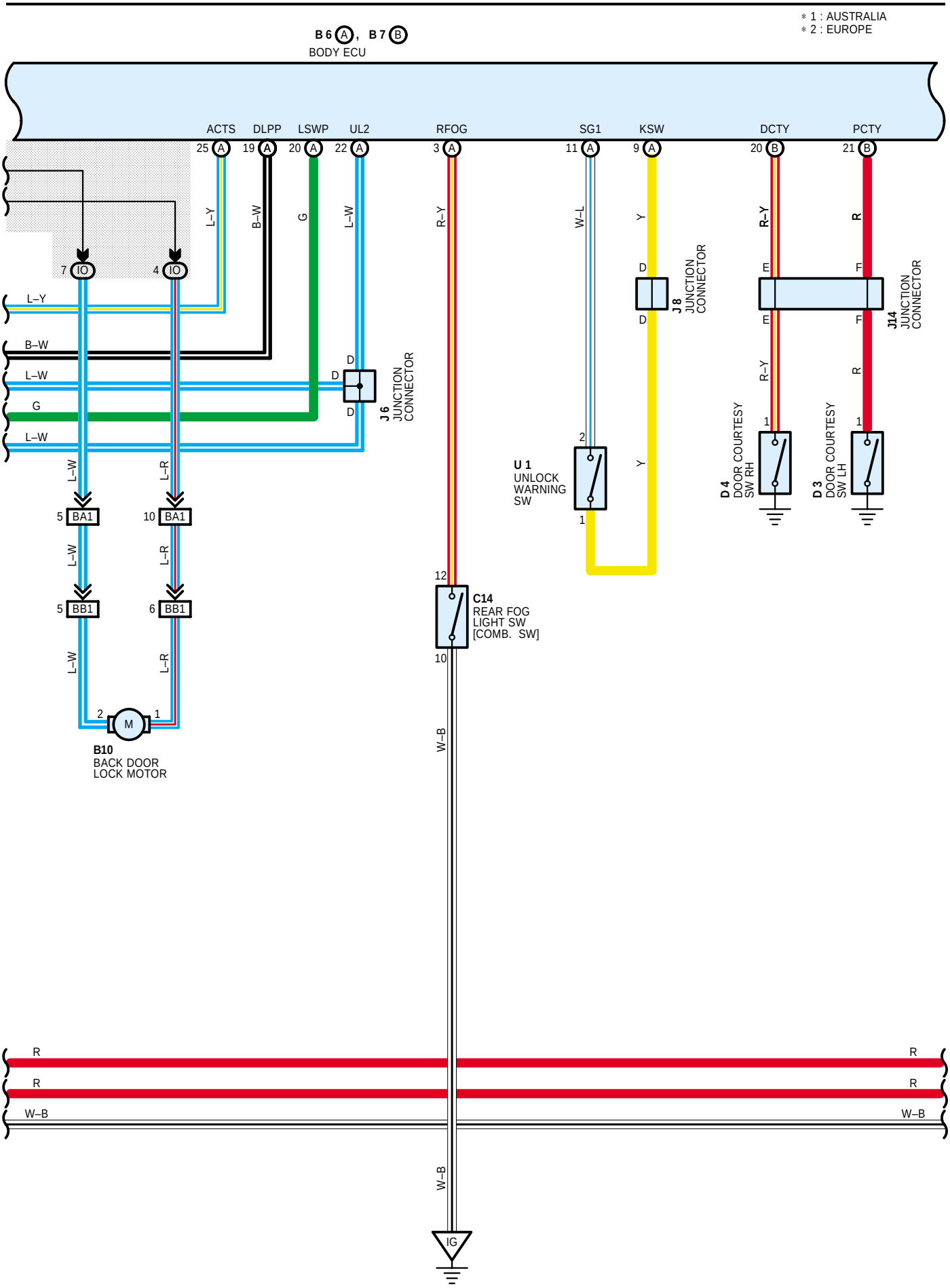
* 1 : AUSTRALIA
* 2 : EUROPE
B6 (A), B7 (B)
BODY ECU
ACTS
DLPP
LSWP
UL2
RFOG
SG1
KSW
DCTY
PCTY
25 (A)
19 (A)
20 (A)
22 (A)
3 (A)
11 (A)
9 (A)
20 (B)
21 (B)
L–Y
B–W
G
L–W
R–Y
W–L
Y
R–Y
R
7 IO
4 IO
J 8
JUNCTION CONNECTOR
J14
JUNCTION CONNECTOR
J 6
JUNCTION CONNECTOR
U 1
UNLOCK WARNING SW
D 4
DOOR COURTESY SW RH
D 3
DOOR COURTESY SW LH
L–R
5 BA1
10 BA1
5 BB1
6 BB1
C14
REAR FOG LIGHT SW [COMB. SW]
B10
BACK DOOR LOCK MOTOR
M
W–B
IG

MULTIPLEX COMMUNICATION SYSTEM (RHD)

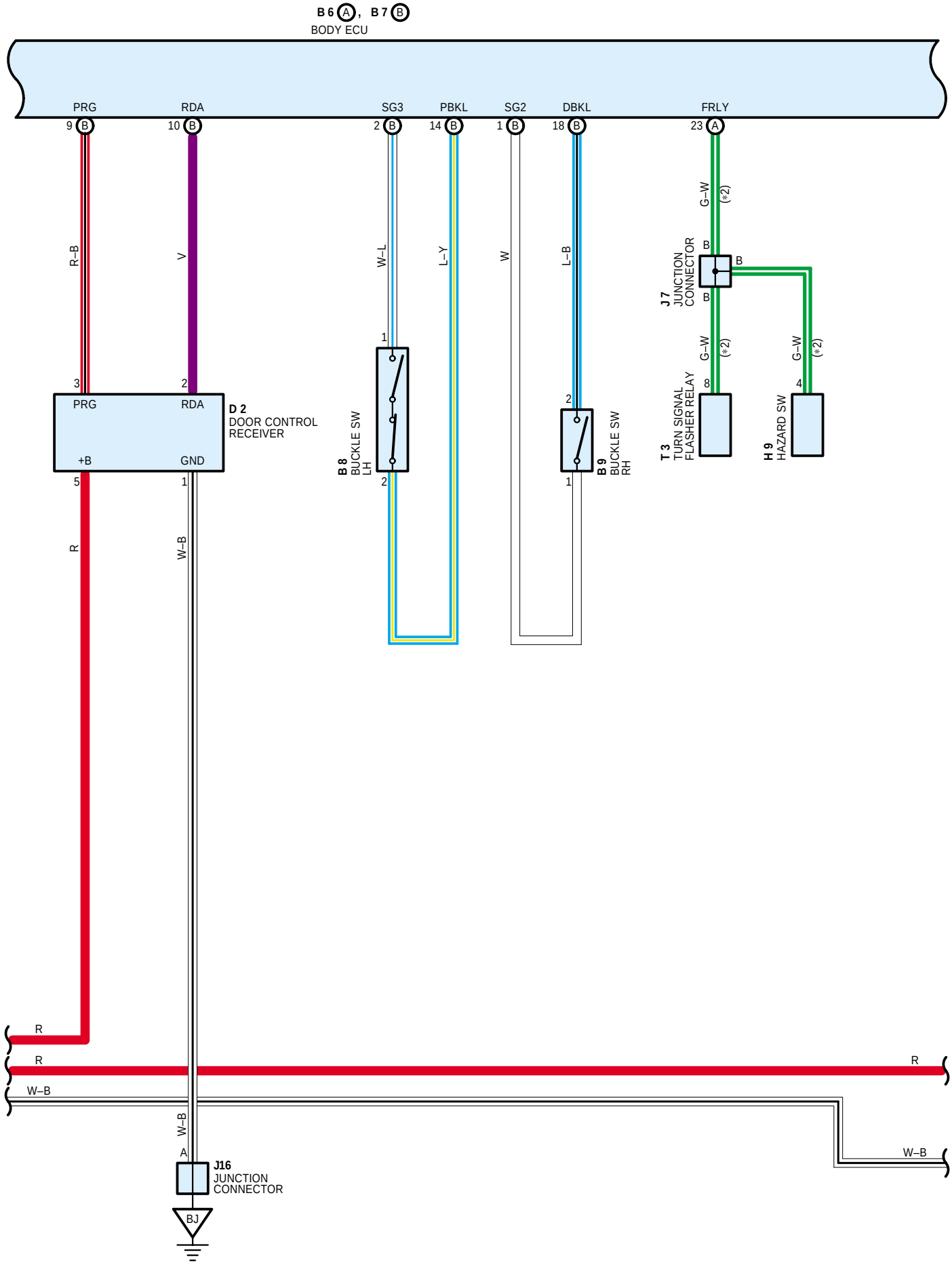

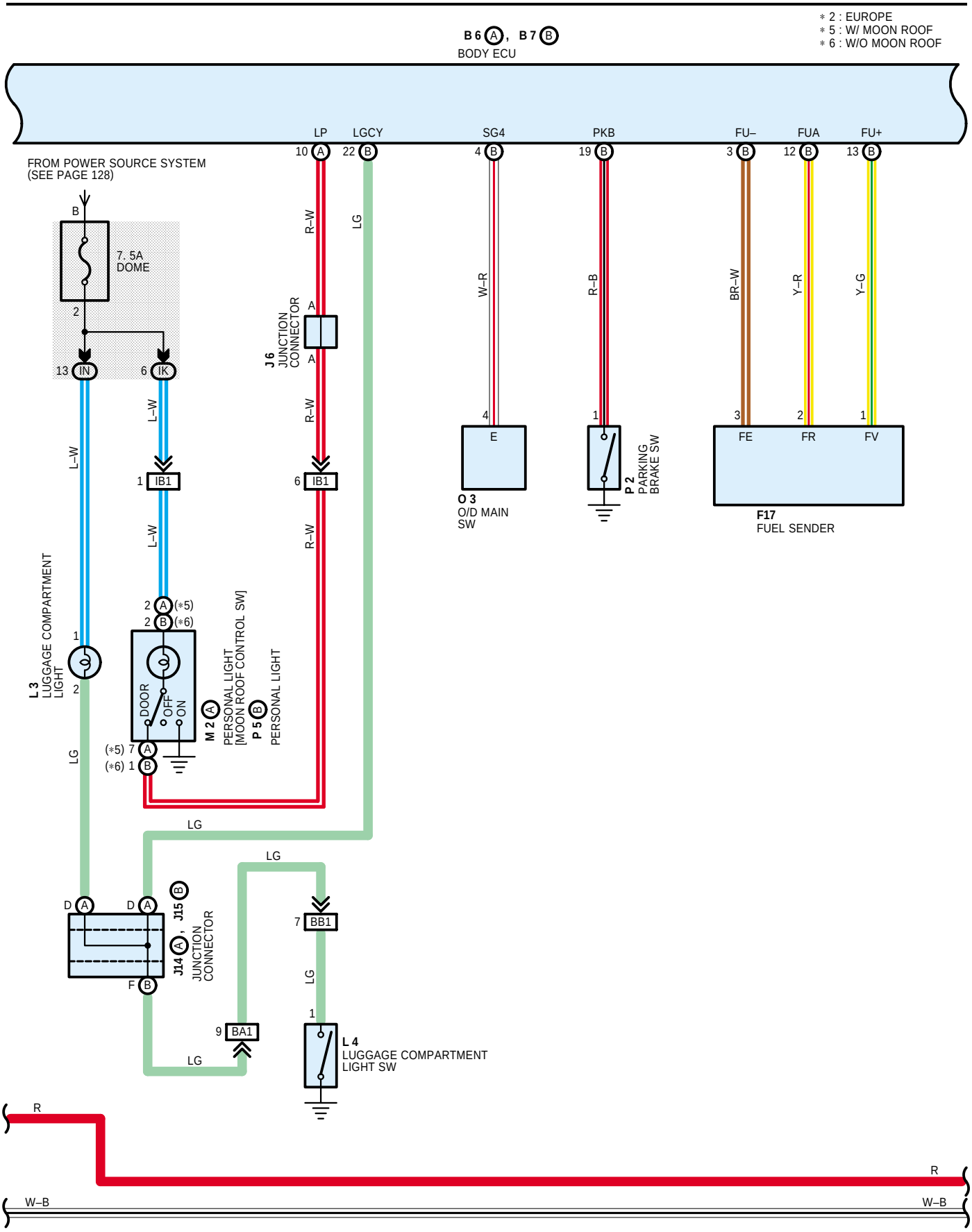
* 2 : EUROPE
* 5 : W/ MOON ROOF
* 6 : W/O MOON ROOF
B 6 (A), B 7 (B)
BODY ECU
LP
LGCY
SG4
PKB
FU–
FUA
FU+
FROM POWER SOURCE SYSTEM
(SEE PAGE 128)
7. 5A
DOME
IN
IK
IB1
J 6
JUNCTION
CONNECTOR
R–W
LG
W–R
R–B
BR–W
Y–R
Y–G
O 3
O/D MAIN
SW
P 2
PARKING
BRAKE SW
F17
FUEL SENDER
FE
FR
FV
L 3
LUGGAGE COMPARTMENT
LIGHT
L–W
DOOR
OFF
ON
M 2
PERSONAL LIGHT
[MOON ROOF CONTROL SW]
P 5
PERSONAL LIGHT
(*5)
(*6)
J14, J15
JUNCTION
CONNECTOR
BB1
BA1
L 4
LUGGAGE COMPARTMENT
LIGHT SW
R
W–B

MULTIPLEX COMMUNICATION SYSTEM (RHD)

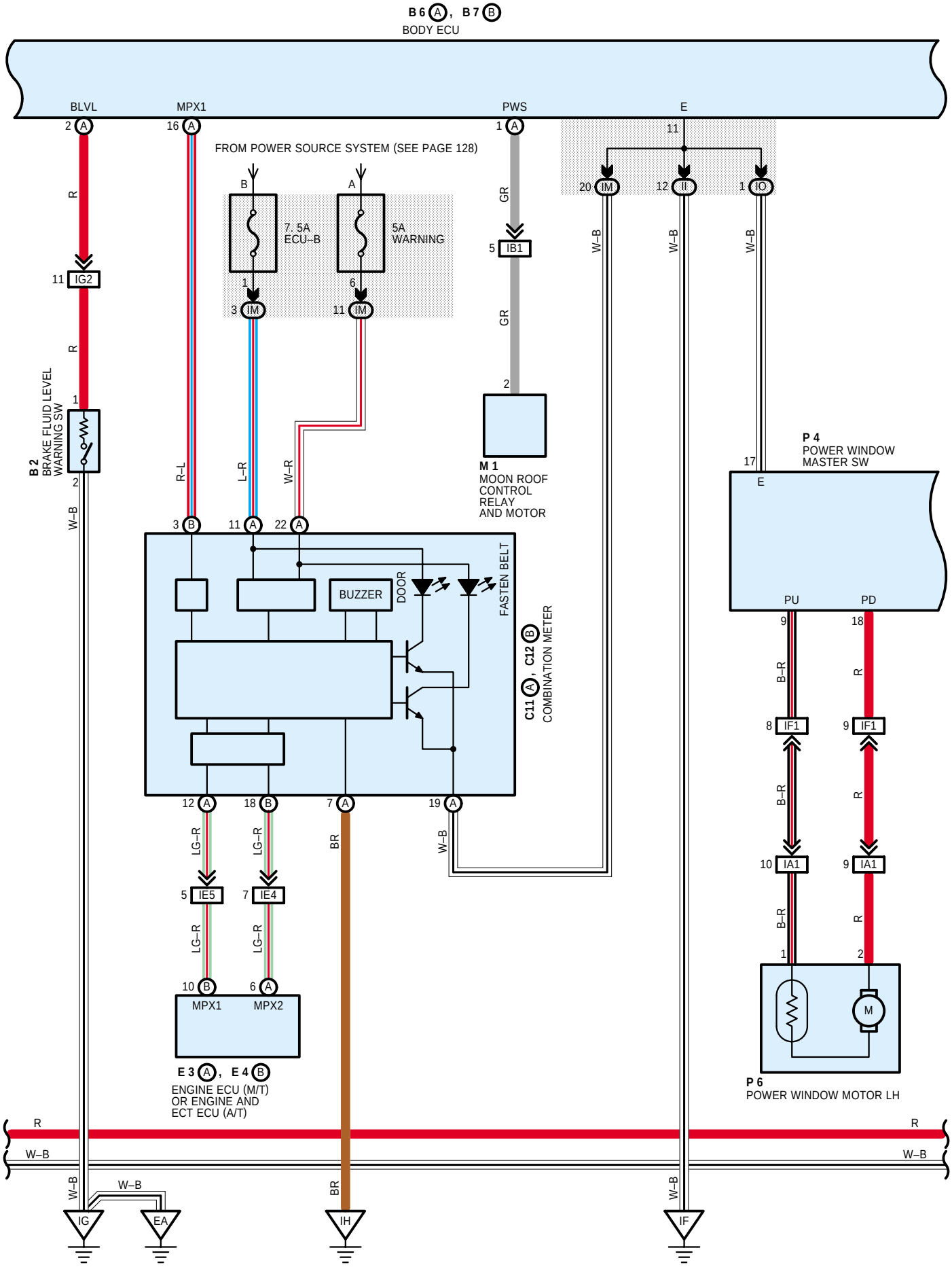

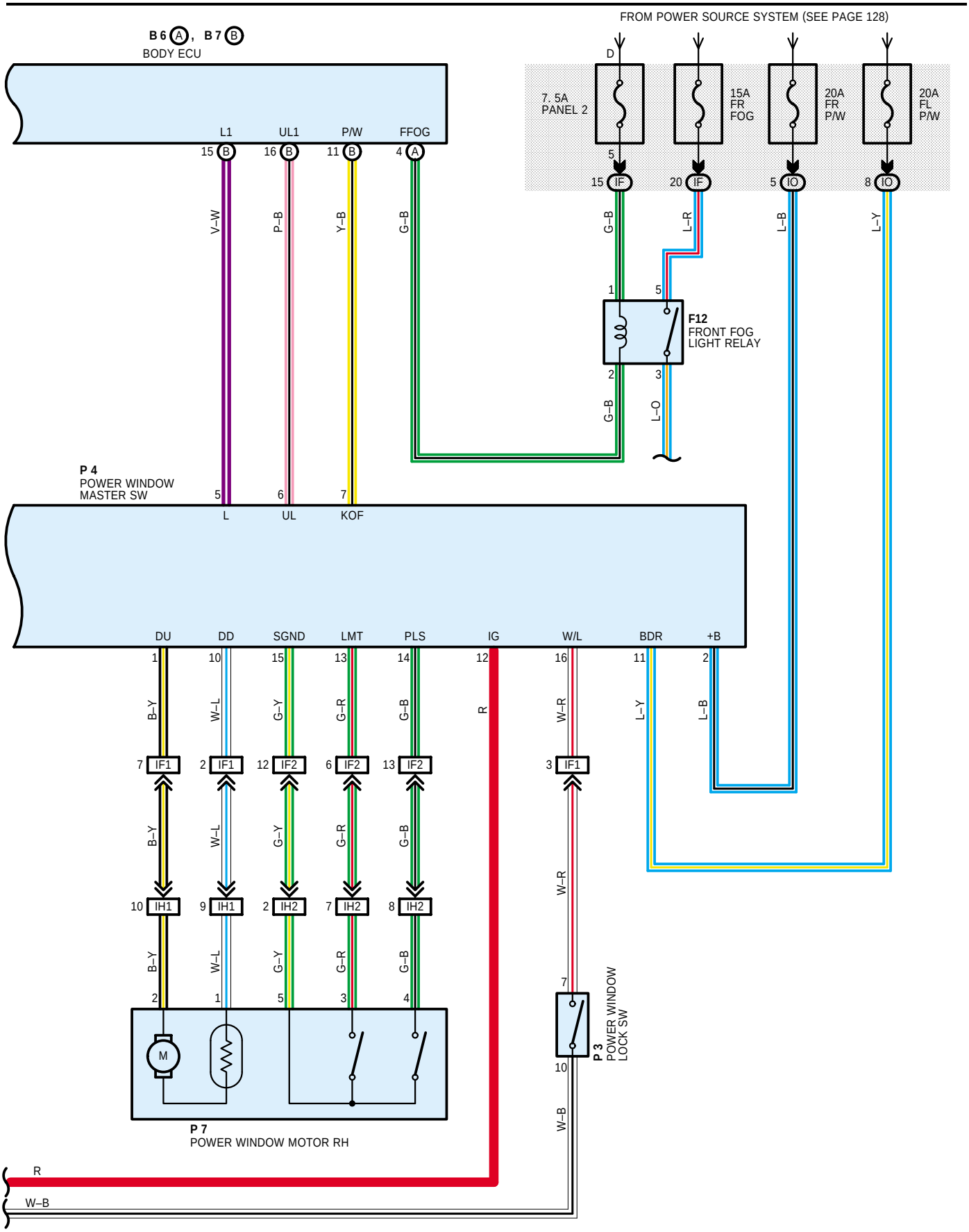
FROM POWER SOURCE SYSTEM (SEE PAGE 128)
B 6 A, B 7 B
BODY ECU
L1
UL1
P/W
FFOG
7. 5A
PANEL 2
15A
FR
FOG
20A
FR
P/W
20A
FL
P/W
F12
FRONT FOG
LIGHT RELAY
P 4
POWER WINDOW
MASTER SW
L
UL
KOF
DU
DD
SGND
LMT
PLS
IG
W/L
BDR
+B
IF1
IF2
IH1
IH2
M
P 7
POWER WINDOW MOTOR RH
P 3
POWER WINDOW
LOCK SW
R
W–B